# 14” -20” HYDRAULIC LINE STOP MACHINE

**102” Travel-14” 150# to 20” 150# and 14” 600# to 20” 600#**

**PRESSURE/TEMPERATURE LIMITS**

**Maximum Operating Pressure @ 100°F**

**102” Travel ----------1480psi**

**Maximum Operating Temperature**

**102” Travel ---------- -20 to 180°F @ 1376psi**

**Control Bar Diameter ---------3.5”**

**Control Bar Bolt Size ----------⅝”x 5” Shoulder Bolt**

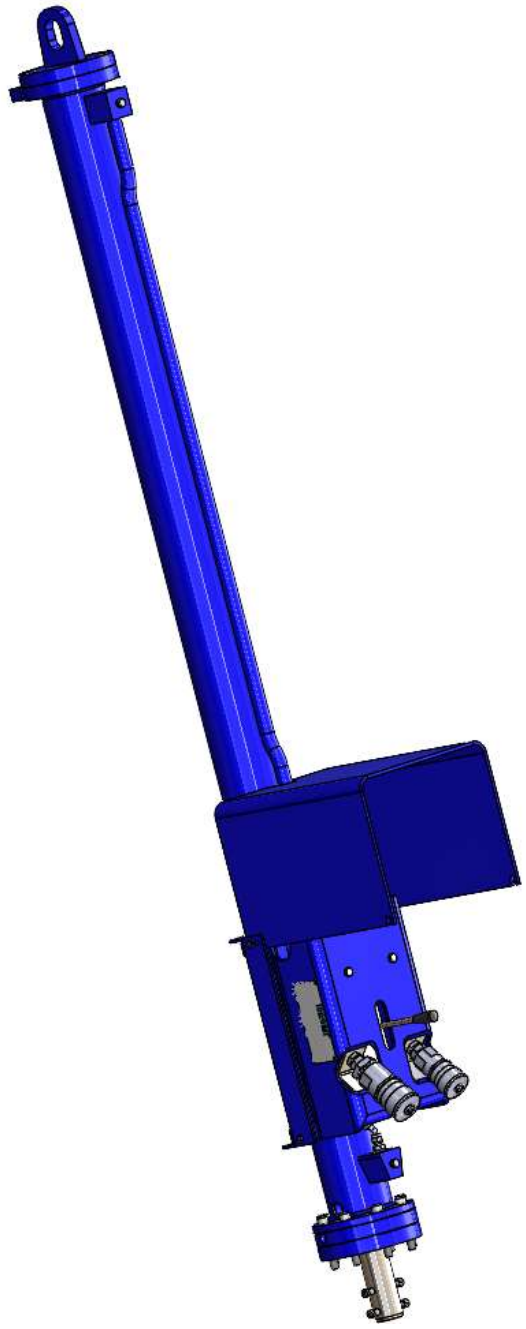

| Function | Rating/Operating Dimensions |
|---|---|
| Maximum Operating Pressure | 1480 PSI @ 100°F |
| Maximum Operating Temperature | -20°F to 180°F @ 1376 PSI |
| Maximum Test Pressure | 1480 PSI with 600# Flange |
| Maximum Bar Travel | 102” |
| Normal Line Stop Range | 150# & 600# |
| Size Range | 14” – 20” (22” in some situations) |
| Attaching Flange | |
| O-ring | Smooth Face |
| RTJ | 6” 600# |
| Attaching Flange Bolt Size | |
| O-ring | ⅝”- 11 x 4-½” |
| RTJ | |
| Flat Faced RTJ Flange | 1”-8 x 3-½” |
| Raced Face RTJ Flange | 1”-8 x 4” |
| RTJ Gasket Size | R 45 |
| O-Ring Size | #352 (5.270” OD x 4.850” ID 0.210” Cross Section)<br>#350 (5.020” OD x 4.600” ID 0.210” Cross Section) |
| Control Bar Diameter | 3- ½” |
| Control Bar Bolt Size | ⅝” x 5” Shoulder Bolt |
| Control Bar Bolt Nut Size | ½”-13 |
| Bar Lock Wrench Size | ½” Hex Key |
| Weight With Out Housing | 1062 LBS |

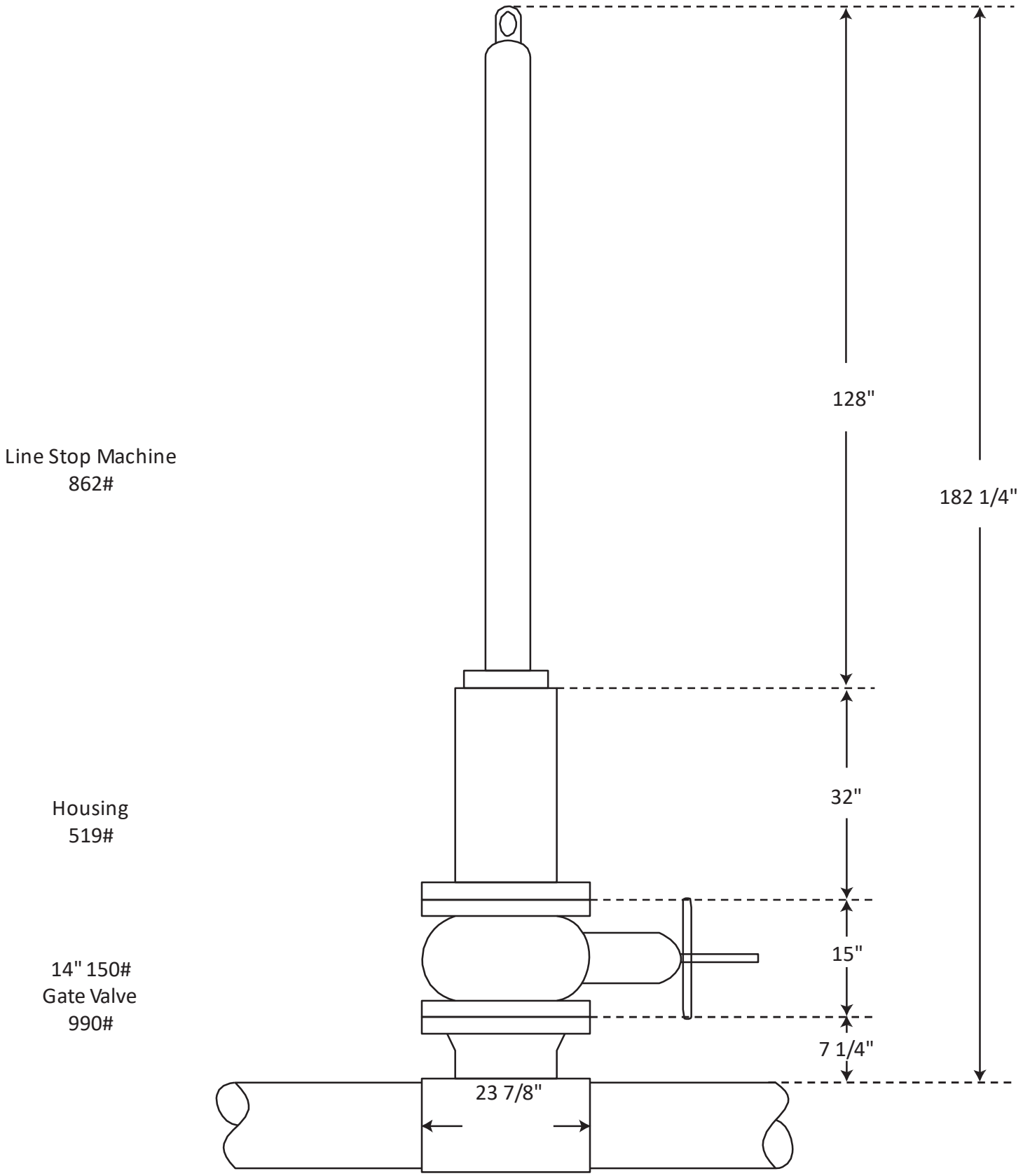


# 14 - 20 Hydraulic Line Stop Machine 14" 150# Line Stop

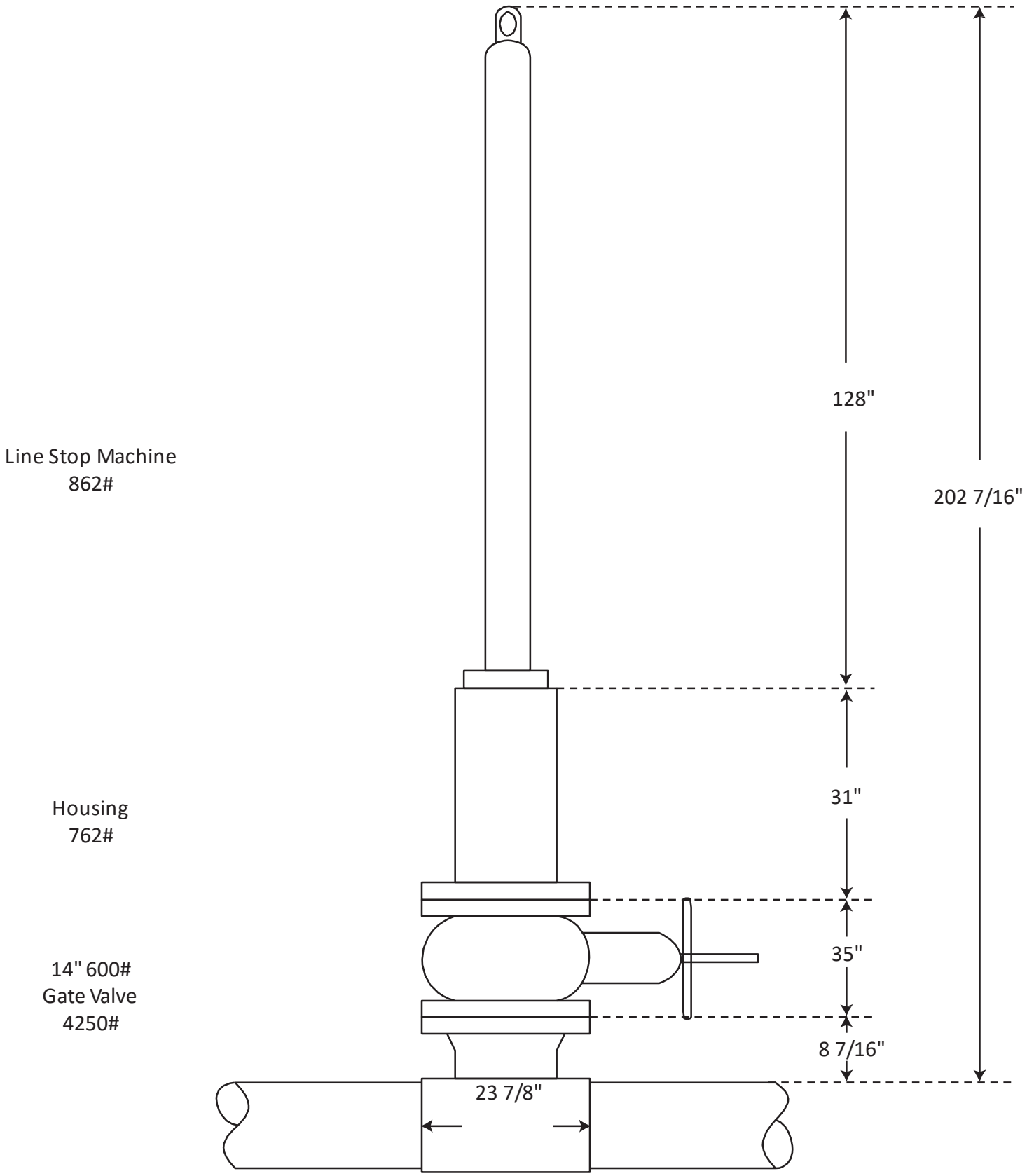


# 14 - 20 Hydraulic Line Stop Machine 14" 600# Line Stop

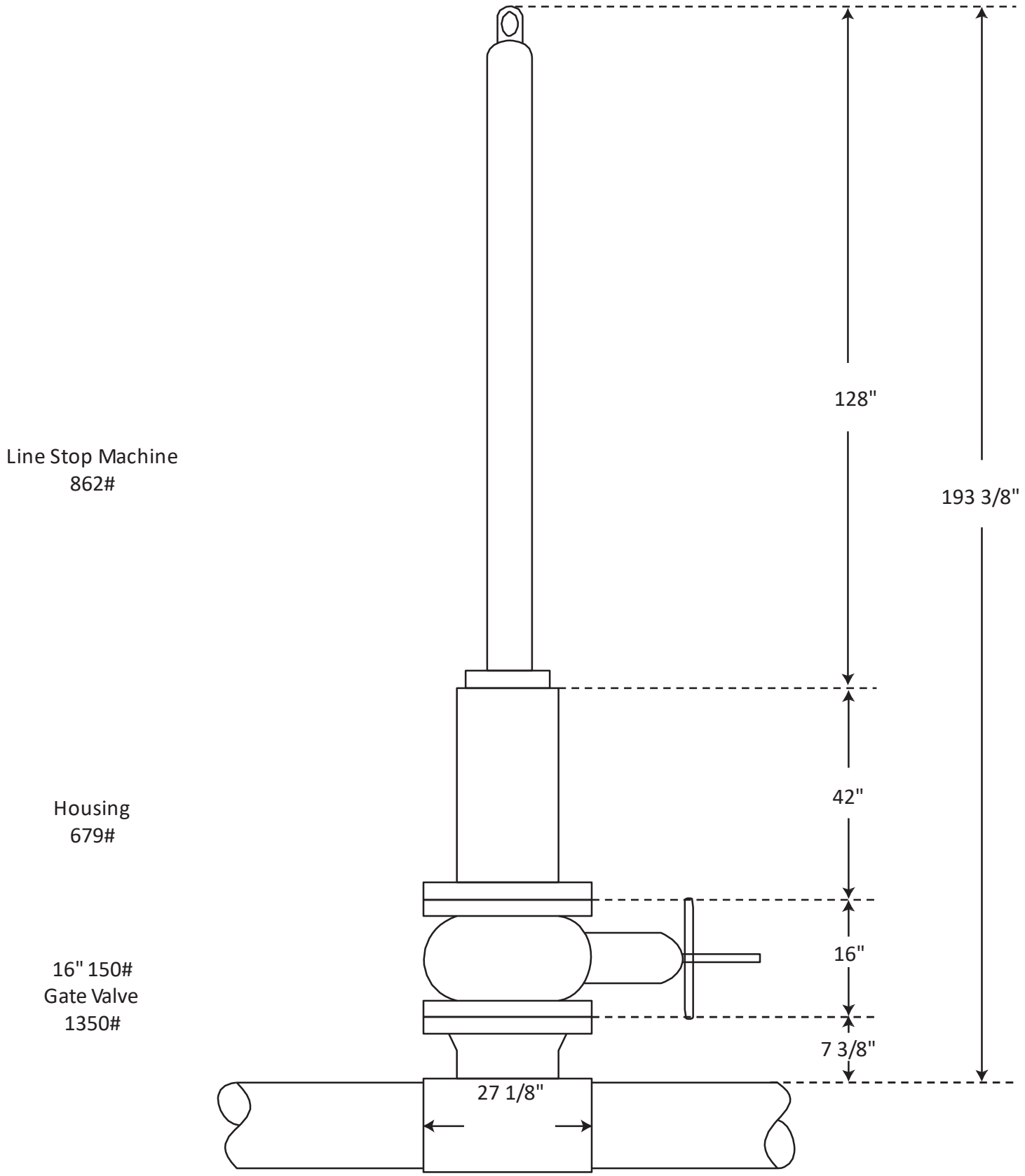


# 14 - 20 Hydraulic Line Stop Machine 16" 150# Line Stop

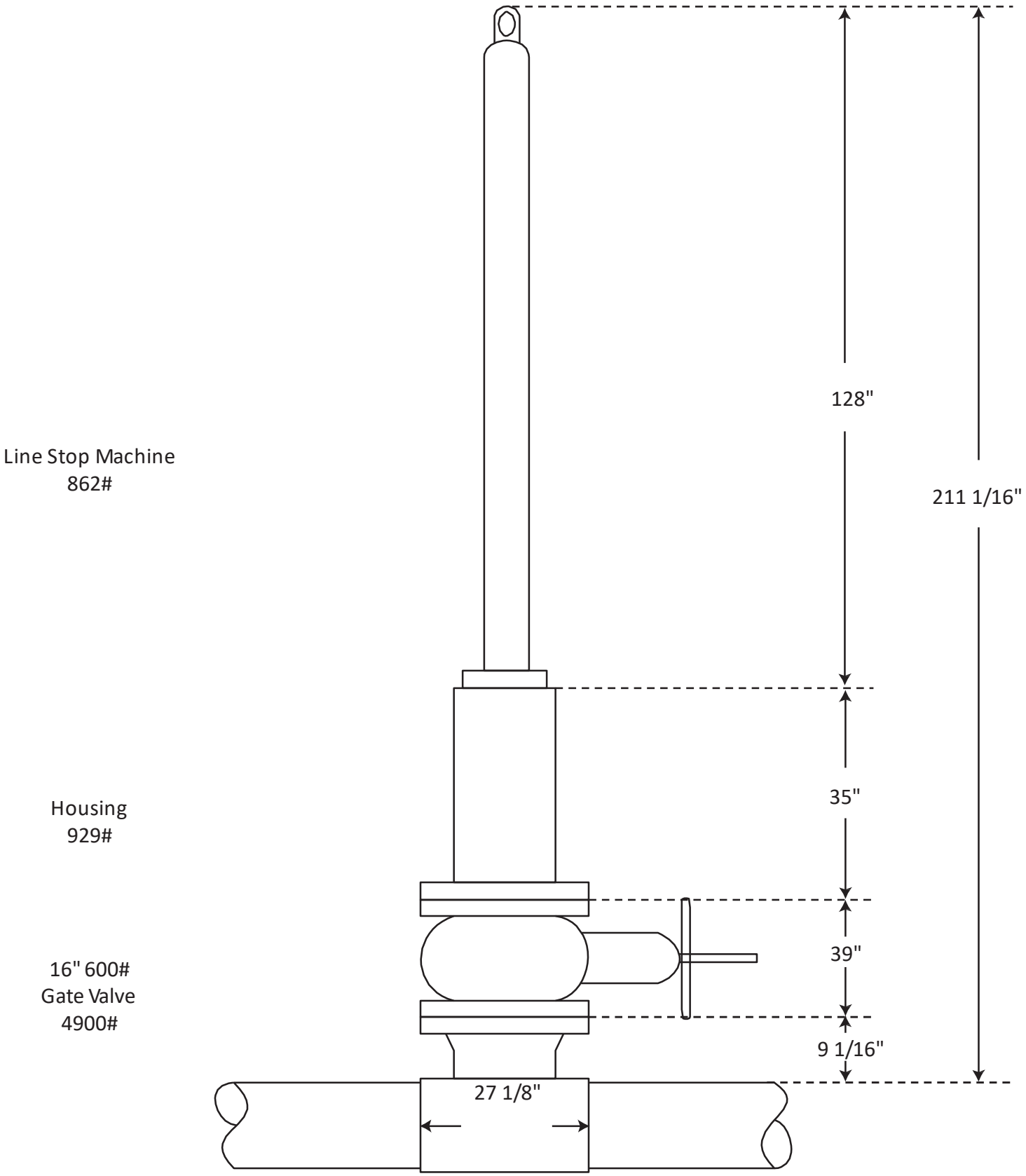


# 14 - 20 Hydraulic Line Stop Machine 16" 600# Line Stop

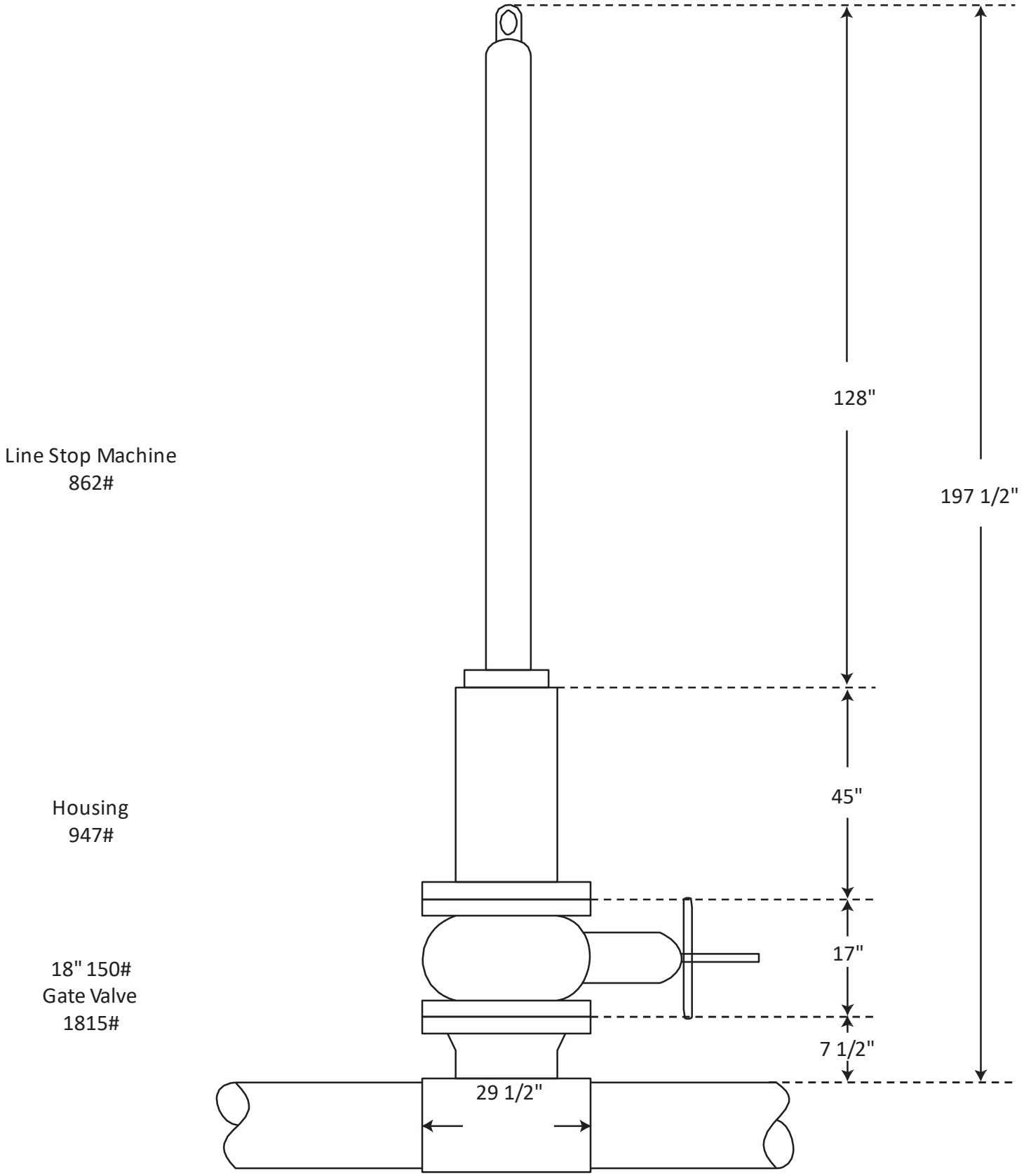


# 14 - 20 Hydraulic Line Stop Machine 18" 150# Line Stop

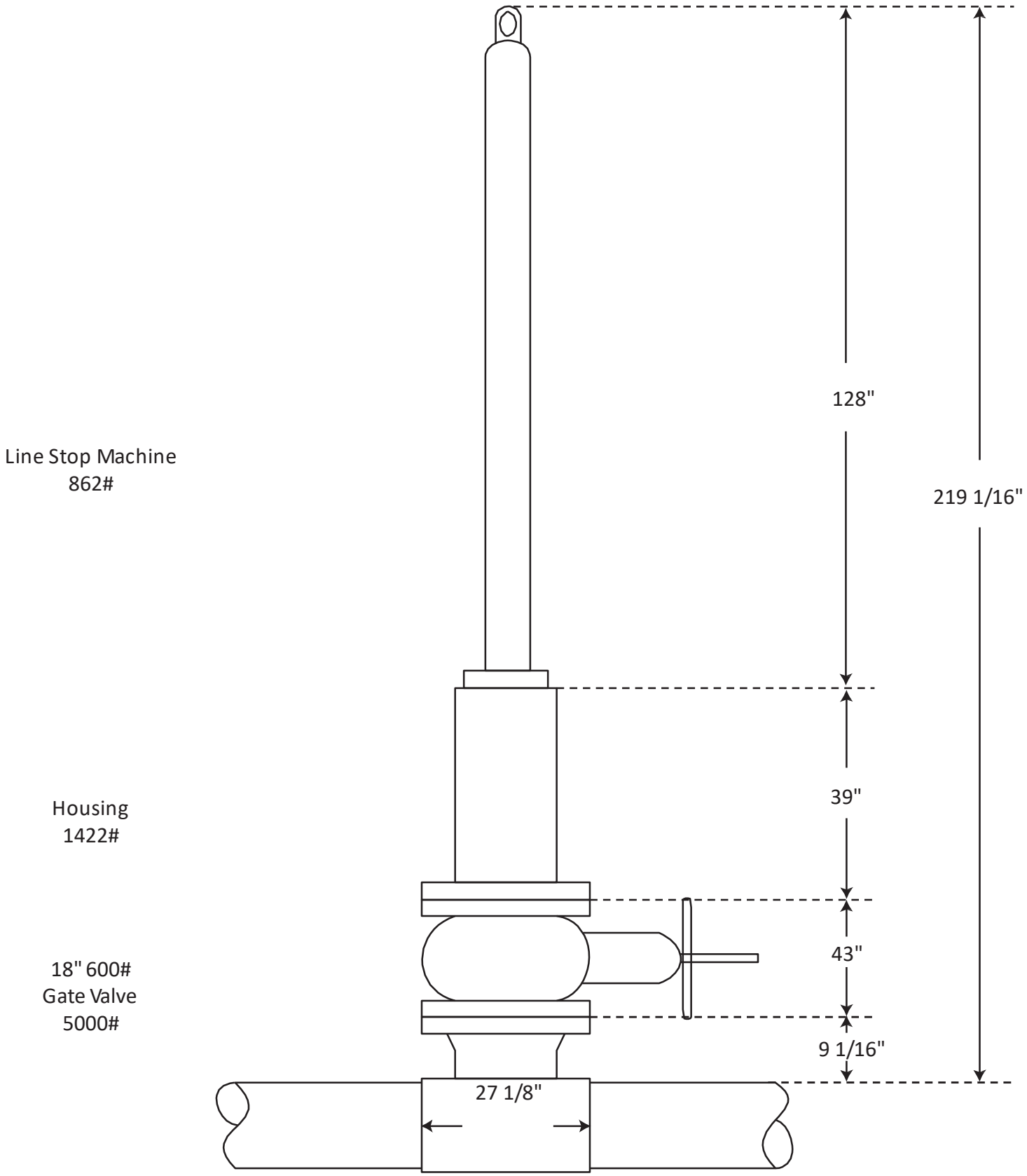


# 14 - 20 Hydraulic Line Stop Machine 18" 600# Line Stop

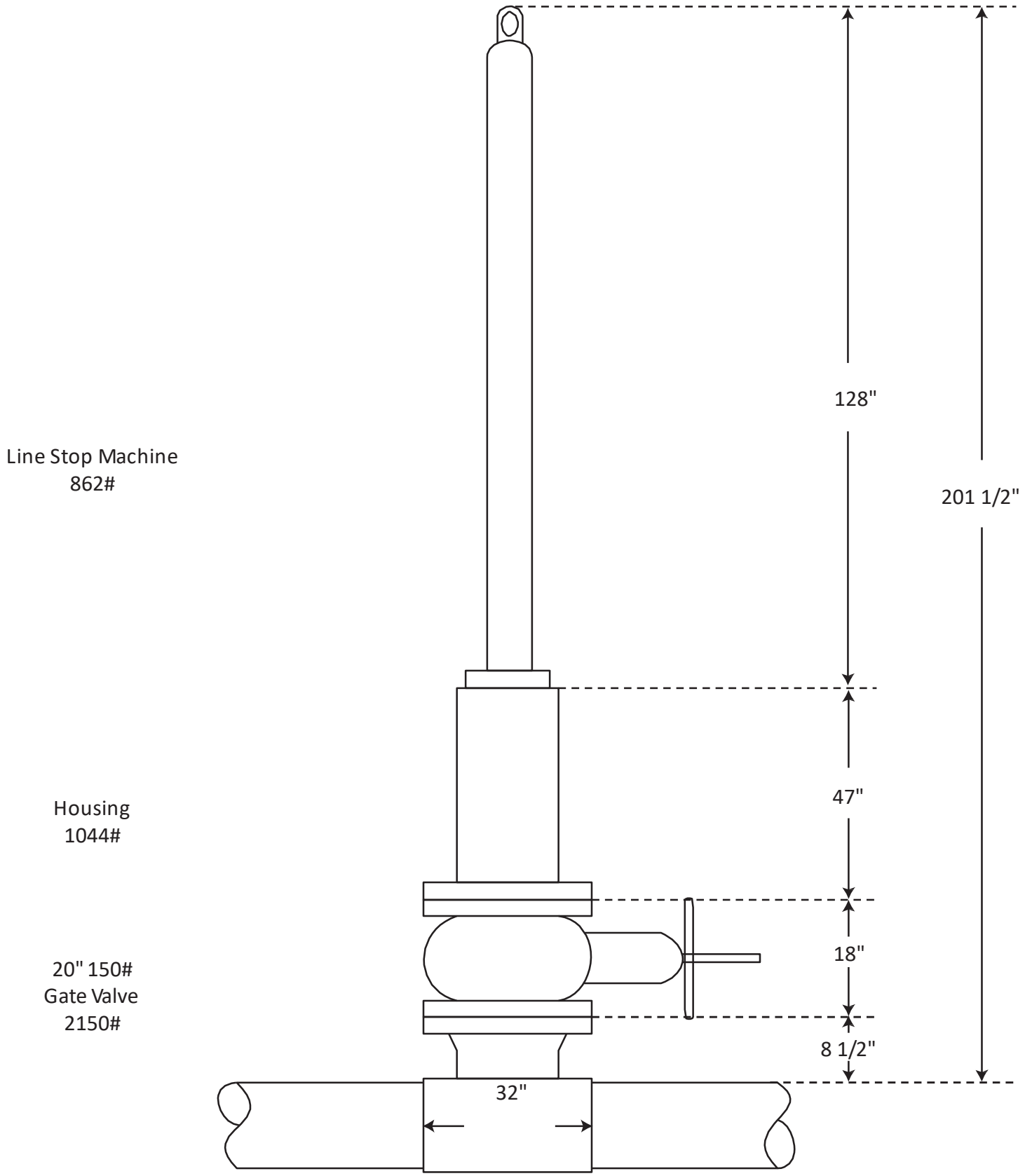


# 14 - 20 Hydraulic Line Stop Machine 20" 150# Line Stop

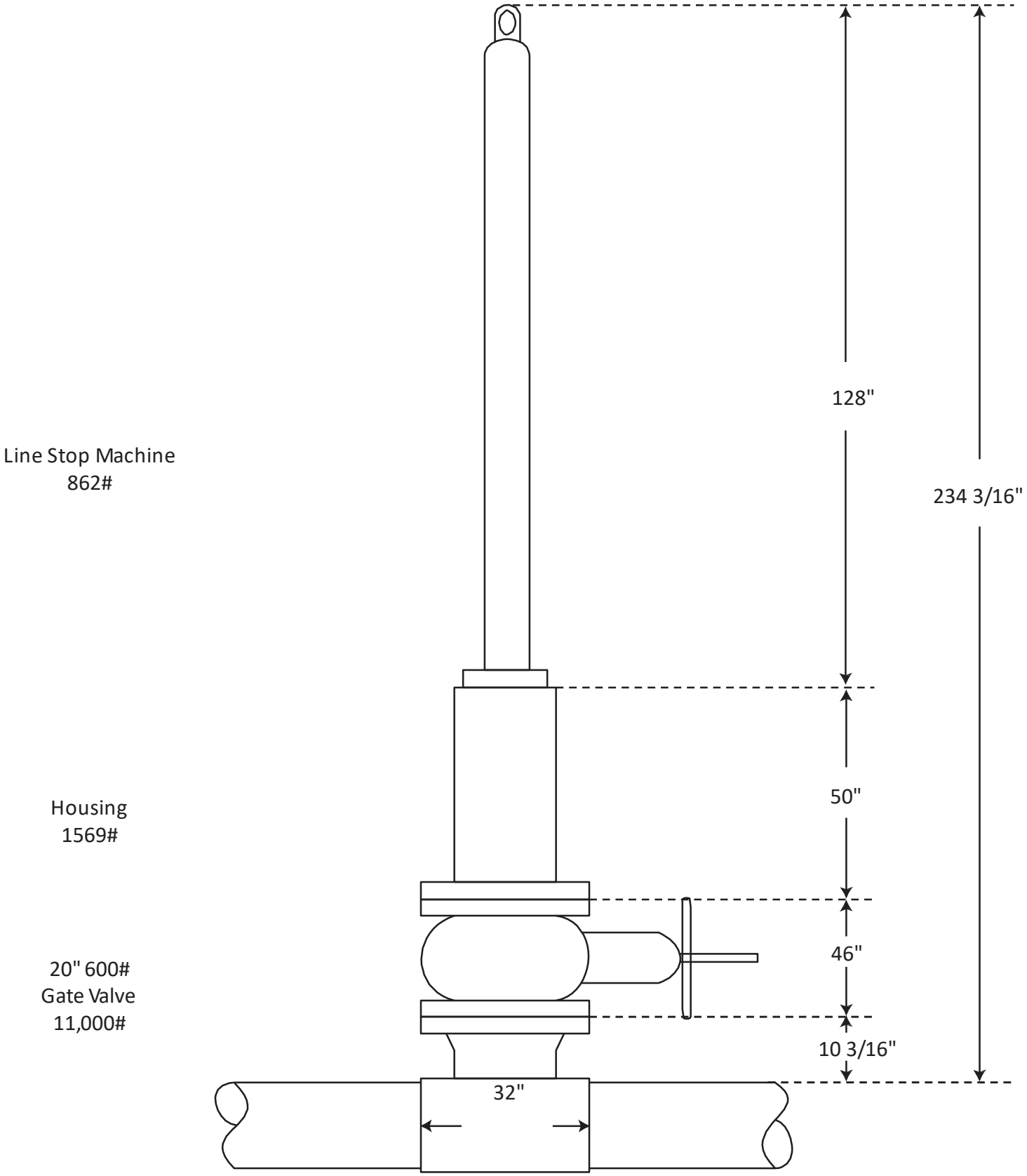


# 14 - 20 Hydraulic Line Stop Machine 20" 600# Line Stop